AMERICAN OFF-ROAD SUPPLY
PARTS & ACCESSORIES

GRILLE GUARDS & WINCH PLATES

NEW RANCH HAND LEGEND GRILLE GUARD - CHEVROLET SILVERADO 1500, GGC16HBL1

Ranch Hand grille guard, part GGC16HBL1, fits Chevrolet Silverado 1500.

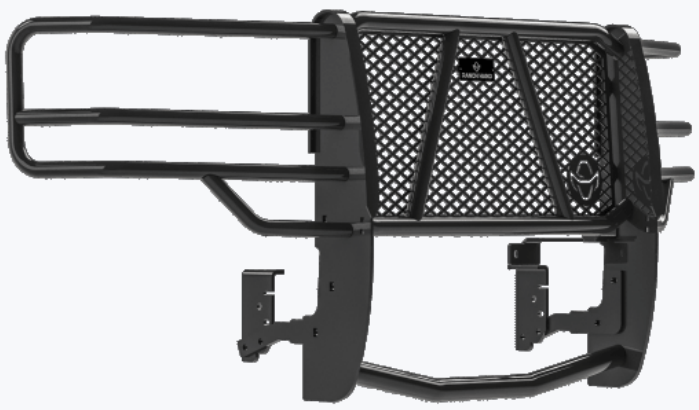

AMERICAN OFF-ROAD SUPPLY

STOCK NO GG-049 · CONDITION NEW · IN STOCK

AMERICAN OFF-ROAD SUPPLY
(210) 786-8152 · sales@americanoffroadsupply.com
americanoffroadsupply.com · 7340 Somerset Rd, San Antonio, TX 78211

PRODUCT SUMMARY

AT A GLANCE

Condition: New. Ranch Hand grille guard cut for the Chevrolet Silverado 1500. Legend series, factory part number GGC16HBL1. New Ranch Hand units carry Ranch Hand's manufacturer warranty; we file and manage any claim for you. Check the part number against your truck before you order, and call us if you want us to confirm the application.

Key details

PRODUCT	New Ranch Hand Legend Grille Guard - Chevrolet Silverado 1500, GGC16HBL1
STOCK NUMBER	GG-049
CATEGORY	Bumpers & Grille Guards > Grille Guards & Winch Plates
CONDITION	New
FITS	Chevrolet Silverado 1500
AVAILABILITY	In stock, one unit as photographed
PRICE	$635.02

Highlights

- CHEVROLET
- NEW
- FREIGHT SHIPPING
- FREE SHIPPING 50 STATES

PRICE

$635.02

Free shipping to all 50 states. Order online at americanoffroadsupply.com or call (210) 786-8152 to confirm fitment first.

FITMENT DATA

VEHICLE FITMENT

Listed for Chevrolet Silverado 1500 trucks. Send your year, make, model, trim and VIN before you order and we confirm the fit in writing, free. Every product page also carries a Fitment Checker. Fitment stated on a listing describes the vehicles the part was designed for; confirming it for your exact truck before installation is your responsibility, with our help.

Fitment table

MAKE	Chevrolet
MODEL	Silverado 1500

Part identity

OEM / MANUFACTURER PART NUMBER	Not recorded; match the number stamped on your old part
PART TYPE	New
STOCK NUMBER	GG-049
CATEGORY	Grille Guards & Winch Plates

Specifications

Condition

This part is new and carries the manufacturer's written warranty, which we file and manage on your behalf.

WHAT YOU RECEIVE

FEATURES AND NOTES

From the listing

- Ranch Hand grille guard cut for the Chevrolet Silverado 1500.
- Legend series, factory part number GGC16HBL1.
- Check the part number against your truck before you order, and call us if you want us to confirm the application.

What is included and installation notes

- Only what is shown in the photographs and named in the listing is included. Brackets, hardware, bulbs, sensors and wiring are not included unless stated.
- Install to the vehicle manufacturer's procedure and torque specifications; professional installation is recommended for electrical, structural and body parts.

How this part ships

Ships on a pallet or crate by LTL freight, free to all 50 states, with no liftgate, residential or fuel surcharges. Handling is 1 to 2 business days after payment clears and transit is typically 2 to 5 business days (3 to 7 business days door to door). The carrier calls to schedule a delivery window; delivery is curbside with liftgate where needed and an adult must sign. Inspect the part before you sign and note any damage on the delivery receipt.

PHOTOGRAPHY

PRODUCT GALLERY

Photographs may be the manufacturer's images of this product.

BUYING FROM US

SHIPPING, RETURNS, WARRANTY AND PAYMENT

Shipping

Free shipping on every order to all 50 states, including Alaska and Hawaii. No surcharges, no liftgate or residential fees. Parcel by UPS, FedEx or USPS; LTL freight on a pallet for beds, bodies, bumpers, grille guards, headache racks and most tailgates. Handling 1 to 2 business days after payment clears, transit 2 to 5 business days, 3 to 7 business days door to door. We ship to street addresses in the 50 states only; no PO boxes for freight, no territories, APO/FPO or freight forwarders.

Local pickup

Free pickup at our yard, 7340 Somerset Rd, San Antonio, TX 78211. Order and pay online, wait for the ready-for-pickup email, bring photo ID. Pickup hours Monday to Friday 9:00 AM to 5:00 PM, Saturday 10:00 AM to 2:00 PM Central, closed Sunday. We hold paid pickup orders for 14 days.

Returns and refunds

30 days from delivery (or pickup) to return any part, new or used, that has not been installed, painted, modified or programmed, with all included hardware. No restocking fee, ever. Buyer pays return shipping on change of mind or wrong fitment where the listing was correct; we pay return freight and refund in full when the part is wrong, not as described, defective or damaged in transit. Refunds go to the original payment method within 5 business days of the part arriving back with us. We refund rather than exchange. Email sales@americanoffroadsupply.com for a return authorization before shipping anything back.

Warranty

Used and OEM take-off parts carry our 90-day parts-only limited warranty from delivery; the remedy is a refund of the part price and we pay the return freight. New parts carry the manufacturer's written warranty, which we file and manage for you. Factory seconds and scratch-and-dent new parts are covered by the 90-day limited warranty instead. Labor, towing and consequential costs are not covered.

Payment

Visa, Mastercard, American Express and Discover at checkout; wire transfer; Zelle, Cash App, Apple Cash and Chime by emailed instructions within 3 business days. USD only. No surcharges, deposits, financing, PayPal, Venmo, checks or crypto. We never take card numbers over the phone.

Sales tax

We do not currently add sales tax at checkout. The listing price is the total you pay. Your state may require you to report use tax on the purchase.

QUESTIONS

FREQUENTLY ASKED QUESTIONS

Will this grille guard fit my truck?

It is listed for Chevrolet Silverado 1500 trucks. Send us your year, make, model, trim and VIN before you order and we will confirm the fit for your exact truck.

What is the part number?

The manufacturer part number is GGC16HBL1. Compare it with the number stamped or labeled on your old part; for electrical parts the number must match exactly or be an approved supersession.

Is this part new?

Yes. It is a new part in the manufacturer's packaging and carries the manufacturer's written warranty, which we handle for you.

What comes with it?

Only what is shown in the photos and named in the listing. Brackets, hardware, bulbs, sensors and wiring are not included unless the listing says so. If you need a related part, ask and we will check the yard.

How does this grille guard ship?

On a pallet by LTL freight, free to all 50 states, with no liftgate or residential fees. The carrier calls to schedule a delivery window, delivery is curbside, and an adult must sign. Inspect it before you sign and note any damage on the delivery receipt.

Can I return it if it does not fit?

Yes. You have 30 days from delivery to return it as long as it has not been installed, painted, modified or programmed. There is no restocking fee. You pay the return shipping unless the mistake was ours, in which case we pay it and refund you in full.

AMERICAN OFF-ROAD SUPPLY
PARTS & ACCESSORIES

NEXT STEPS

INTERESTED IN THIS PART?

Send us your year, make, model, trim and VIN and we will confirm fitment before you order. Order online at https://americanoffroadsupply.com/product/new-ranch-hand-legend-grille-guard-chevrolet-silverado-1500-ggc16hbl1/ or call us. Quote stock number GG-049.

AMERICAN OFF-ROAD SUPPLY

PHONE	(210) 786-8152
EMAIL	sales@americanoffroadsupply.com
WEBSITE	americanoffroadsupply.com
YARD	7340 Somerset Rd, San Antonio, TX 78211
HOURS	Mon-Fri 9:00 AM-5:00 PM, Sat 10:00 AM-2:00 PM Central, closed Sunday

American Off-Road Supply is an independent dealer in new and used truck parts and is not an authorized dealer for any parts manufacturer or vehicle brand. Vehicle maker names appear only to state fitment or the maker of a genuine part. Reference: stock number GG-049. Brochure generated October 25, 2026; price and availability are as of that date and may change.